ITEM	DESCRIPTION	MATERIAL	QTY
1	HEAD SECTION	316 SS	1
2	BASE SECTION	316 SS	1
3	DRIVE UNIT; HELICAL BEVEL 2.5 rpm. 1.1 kW 415VAC	PAINTED CI	1
4	DRIVE SPROCKET; 7 TOOTH, 350 PITCH, 690 PCD	UHMWPE	2
5	DRIVE TAKE-UP BEARING; 90ø	PAINTED CI	2
6	SCREEN BAND; 300 PITCH, 6ø APERATURE	316 SS	N
7	SCREEN BAND ROLLER; 70ø	NYLON	2N
8	DISCHARGE LAUNDER; DN350	316 SS	1
9	SPRAY BAR INLET; DN40 AS 2129 TABLE D RF	316 SS	1
10	SPRAY BAR SOLENOID VALVE; DN40 24VDC	316 SS	1
11	SPRAY BAR NOZZLE; DN10 FLATJET 65°	PP	
12	SCREEN BAND ROLLER ACCESS COVER	316 SS	2
13	SCREEN BAND ACCESS COVER w 7 sq KEY LOCK	316 SS	4
14	OPTION – DISCHARGE SCREW DRIVE ADAPTOR FLANGE	316 SS	1

BASE HEIGHT (DIM A)	DISCHARGE HEIGHT (DIM B)	TOTAL HEIGHT (DIM C)
1,400	1,525	3,000
2,000	2,125	3,600
2,600	2,725	4,200
3,200	3,325	4,800
3,800	3,925	5,400

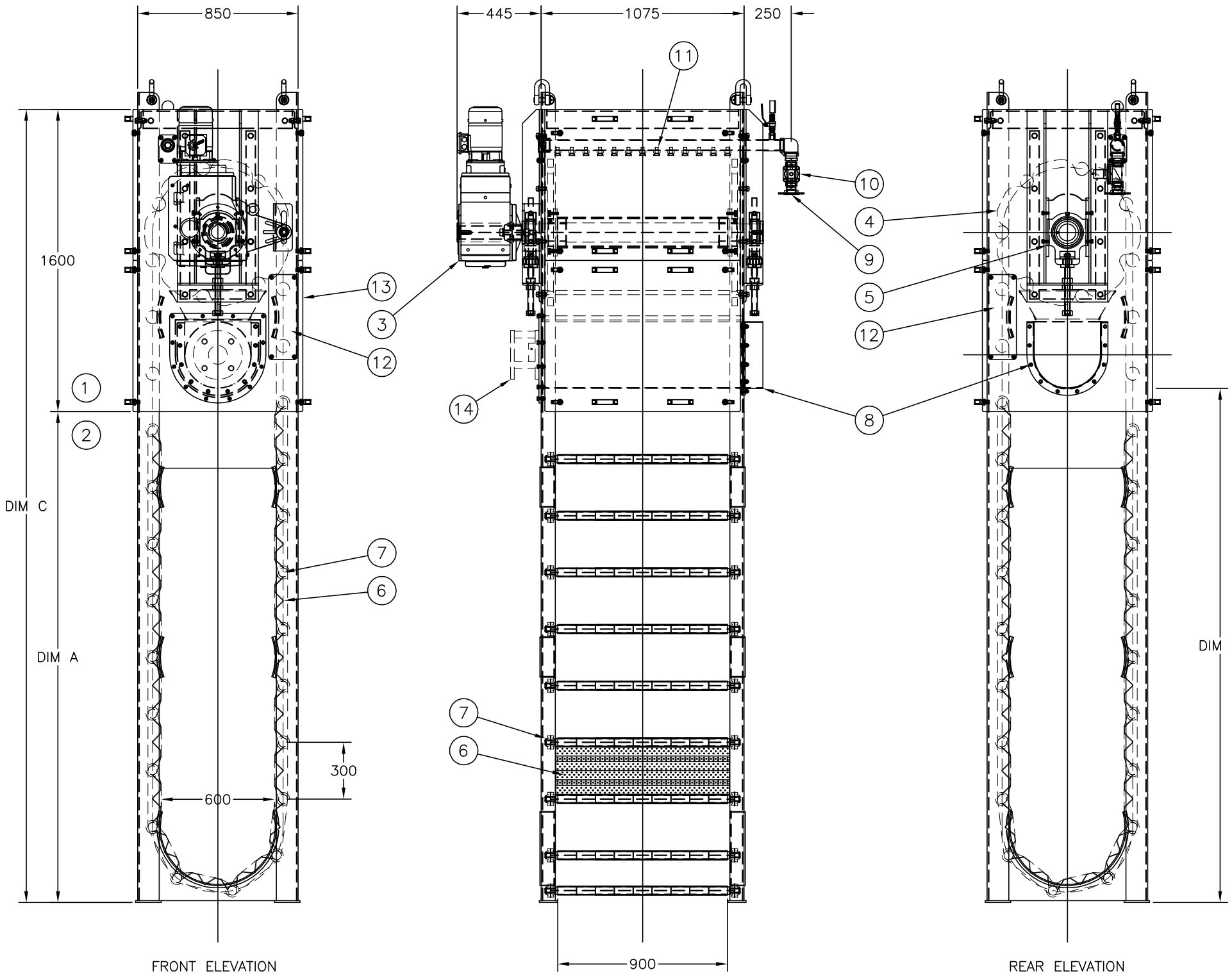

HyBand SCHEMATICS

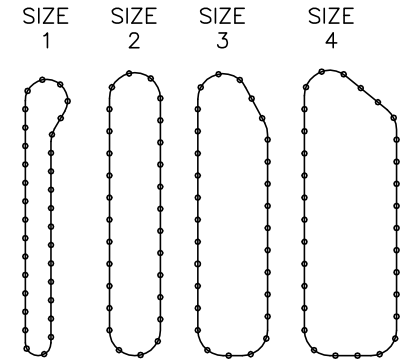

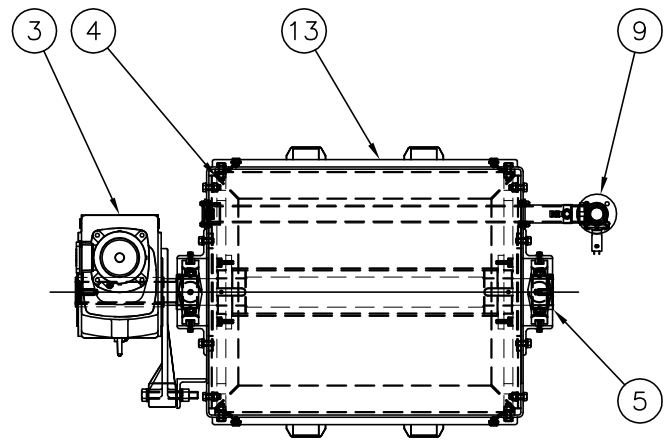

PLAN

DRAWING STATUS

FOR TENDER

RV.	DATE	REVISIONS	REC.	APPR.
C	30/9/14	GENERAL UPDATE	JJC	JK/LB
B	31/8/14	DESIGN REVIEW WORKSHOP UPDATE	JJC	JK/ LB
A	1/7/14	FIRST ISSUE	JJC	JK

A3

DRAWN: JJC 1/7/14

APPROVED: JK 1/7/14

SCALE: NTS

Hydroflux HUBER Pty Ltd
Level 26, 44 Market Street
Sydney NSW 2000
Australia
Ph +61 2 9089 8833 Fax +61 2 9089 8830

HYDROFLUXHUBER WATER | SCIENCE | TECHNOLOGY

A HYDROFLUX GROUP COMPANY

STANDARD
HyBand Size 2-0.9
General Arrangement

DATE 1/7/14

DRAWING No.

HyBand 2-0.9

C

RV.